

DMD
Dal Machinery&Design

ABOUT
DAL ENGINEERING GROUP

DAL Engineering Group is one of the world's leading engineering companies that provides machinery, equipment and customized solutions for turnkey industrial projects for;

- Cement and Lime Industries

- Grinding Plants for Raw Material, Cement and Coal

- Refractory, Ore and Mineral Industries

- Energy and Power Plants

- Heat Recovery and Environmental Technologies

- Electric and Automation of Processes



LEADING ENGINEERING COMPANY

We are capable of; designing, producing, integrating equipments, accomplishing turn-key projects. We develop, engineer and build greenfield projects and revamp, upgrade brownfield facilities.

THE MOST INNOVATIVE

We enhance and sustain value creation by innovation. We have a strong R&D center that always welcomes sharp minds with fresh ideas. We have made remarkable contributions to the technological advancement in areas we are active.

MULTIDISCIPLINARY APPROACH

We employ technology for the good of human and nature. This technology comes from a set of diverse areas such as energy efficiency, digitalisation and process optimisation.

DAL ENGINEERING COMPANIES

DAL Technic Machinery

DMD Dal Machinery&Design

DAL Electric Automation

DalElectric

DAL RENEWABLE ENERGY INVESTMENT and TECHNOLOGIES CO.

DAL HEAVY INDUSTRIES

DAL CONSTRUCTION TECHNOLOGIES CO.

FONS TECHNOLOGY INTERNATIONAL

DAL MACHINERY & DESIGN

YOUR GLOBAL PARTNER FOR HEAVY MACHINERY DESIGN AND MANUFACTURING







DAL Machinery & Design is an innovative leader in cement, zinc recovery and energy industries. We provide machines, equipment and customized systems. DAL Machinery & Design creates a unique customer experience in order to implement the most effective and profitable investment.

DAL Machinery & Design has been providing machineries for industrial plants since 1985. We mainly focus on cement, lime, coal and energy technologies and other heavy industries. DAL Machinery & Design also supplies integrated services together with DAL Engineering Group (DEG) companies.

MISSION

To be a helping hand for our customers whenever they need us. To put their needs ahead of everything and the desire to solve their problems as a technology provider company in most economic and environmental-friendly way.

VISION

To become the sole address for our customers with our dynamic employees throughout the world. To offer efficient solutions for their problems and genius ideas for their needs. In the areas of design and engineering and turnkey solutions for the sectors of cement, lime, gypsum and coal.

OUR SERVICES

- ENGINEERING
- REVAMPING
- MANUFACTURING
- SPARE PARTS
- CONSTRUCTION SERVICES
- SITE SERVICES

EQUIPMENT LIST



CEMENT MILL



DYNAMIC SEPARATOR



MILL SHELL



MODULAR
GRINDING PLANT



ROTARY KILN



HYDRAULIC
THRUST ROLLER

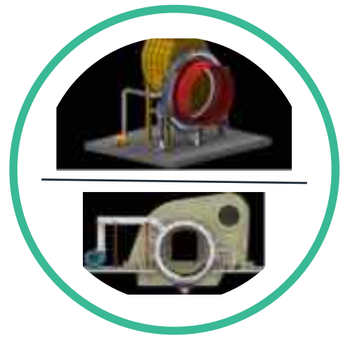

INLET & OUTLET
SEALING



KILN SHELL

EQUIPMENT LIST



KILN
TYRE & ROLLERS



CLINKER ROLLER
CRUSHER

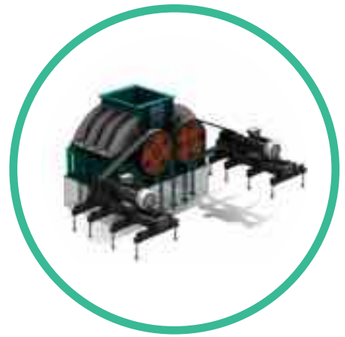

DOUBLE SHAFT
CRUSHER



BOLTED
STEEL SILO



SURFACE FEEDER



APRON FEEDER



GRINDING ROLLERS
OF VERTICAL MILLS



SPARE PARTS

BALL MILLS



Double pinion direct gearbox with girthgear.

Central drive reducer with shaft coupling.

Direct drive torque arm reducer without coupling.

MAXIMUM GRINDING EFFICIENCY

LOW ENERGY CONSUMPTION

COMPACT PLANT LAYOUT AND MILL DRIVE DESIGN

APPROVED LINING TYPES

CEMENT MILLS | UDCM Cement Mill Series

Diameter x Length (m)	min.Capacity (tph) *1)
Ø 3,0 x 10	**30**
Ø 3,2 x 11	**40**
Ø 3,2 x 13,5	**50**
Ø 3,8 x 13	**75**
Ø4,0 x 13,5	**90**
Ø 4,2 x 14,5	**110**
Ø 4,4 x 14,5	**125**
Ø 4,6 x 15	**145**
Ø 5,0 x 15	**180**

*1) OPC CEM I 32,5N, 3200 Blaine, 95% Clinker, 5% Gypsum

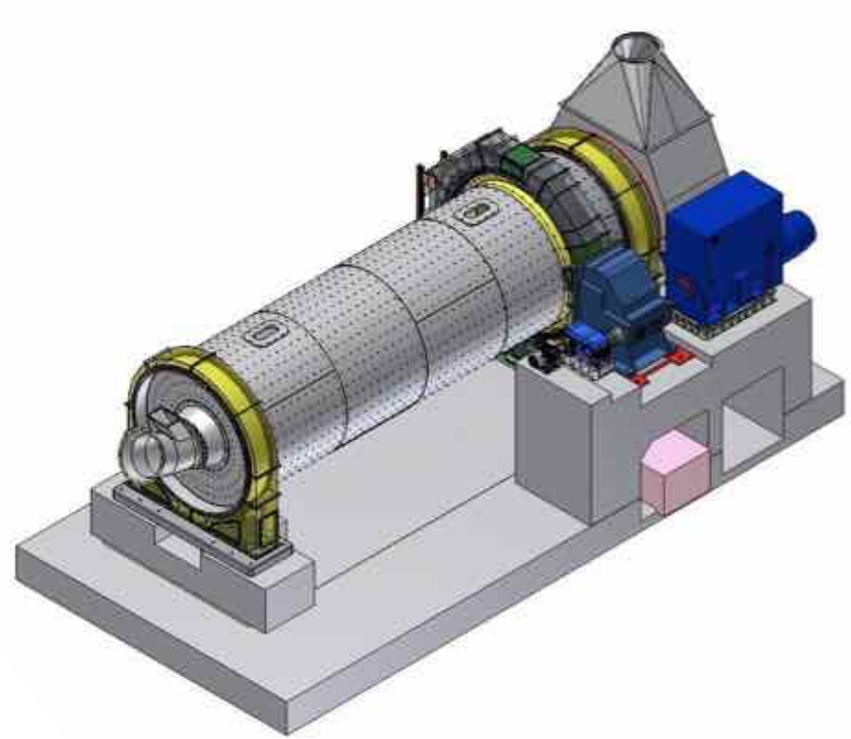

MODULAR GRINDING PLANTS



MODULAR DESIGN UP TO 75 TPH

SHORT DELIVERY TIME

LOW INVESTMENT COST

EASY AND FAST ERECTION

LESS SPARE PARTS

CUSTOMIZED CAPACITY AND SOLUTIONS

DYNAMIC SEPARATOR

DAL Machinery & Design serves dynamic separator for grinding and separation processes. Unique advantages and prevealing with other types of separators as follows;

Reliable mechanical properties.

Distribution plates ensure the uniform material distrubition and increase separation efficiency.

Optimized and compact design.

High efficiency separation.

Easy to maintain construction, modular system.

Special designed rotor blades, low wear and tear.

Speed control enables to select product range.

Easy operation with fully automatic control system.





LOW PRESSURE DROP

EFFECTIVELY USED ROTOR

AREA LOW NOISE AND VIBRATION

IDEAL TROMP CURVE

ECONOMIC AND EASY MAINTENANCE

COST EFFECTIVE INSTALLATION

FLEXIBLE ROPE COUPLING



ELIMINATION OF AXIAL LOAD BETWEEN BALL MILL AND GEARBOX

ISOLATION OF VIBRATION BETWEEN BALL MILL AND GEARBOX

COMPENSATE TORQUE PEAKS

HIGH SETTING TOLERANCES
(COMPENSATE LARGE RADIAL AND AXIAL DEVIATIONS)

LOW INVESTMENT AND SHORT ERECTION TIME

ROTARY KILN

DAL rotary kilns use graphite seals at the inlet & outlet of the kiln, which guarantees 0 false air intake into the system.

Our optimize kiln design ensures operational reliability and increases the lifetime of the kiln.

The kiln tyre & support rings can be manufacture with casting and forged manufacturing methodology.

DAL girth gears can be manufactured in a segmented design.



HIGH RELIABILITY

LOW CAPITAL EXPENSE

LOW SPECIFIC OPERATING COST

ROTARY KILN

Nomianal Capacity (tpd)	Diameter x length (m)	Installed power
2000	3.6 x 52	250
2500	3.8 x 54	315
3000	4.0 x 58	400
3500	4.2 x 60	560
4000	4.4 x 62	630
4500	4.6 x 66	700
5000	4.8 x 68	800
6000	5.0 x 72	2 x 450
7000	5.2 x 74	2 x 500
8000	5.4 x 78	2 x 560

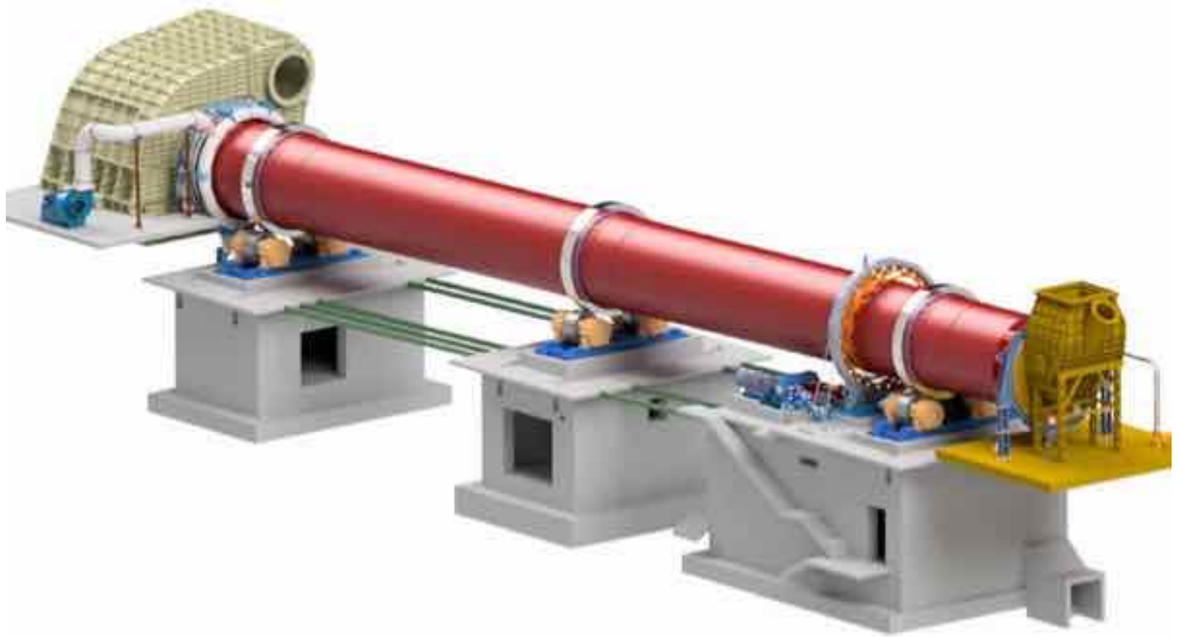

ROTARY KILN | Products and Services







Rotary Kiln Design for Any Size

Kiln Shell and Heavy Kiln Shell

Graphite Type Kiln Inlet and Outlet Seals

Kiln Tyres and Rollers

Segmented Girth Gears

Drive Systems

Hydraulic Thrust Roller

Rotary Kiln Main Burner

Kiln Camera Systems

Supervision Services

Kiln Maintenance Service

Rotary Kiln Ovality Measurements

HYDRAULIC THRUST ROLLER

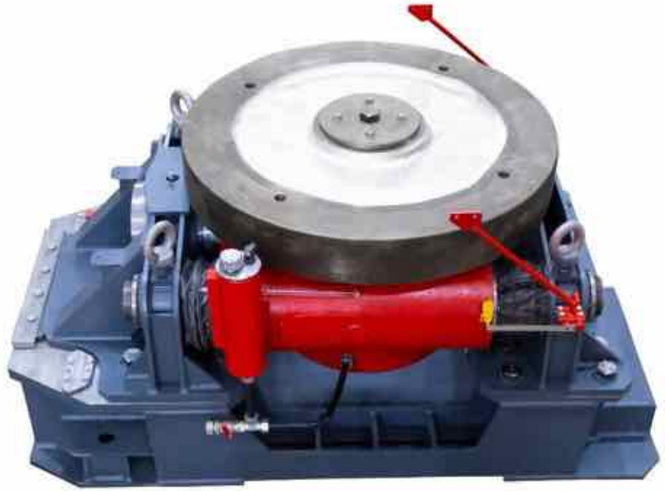

The automatic hydraulic thrust roller controls the kiln's axial motion. The hydraulic thrust device is designed to compensate the full axial load of the kiln, so skewing of the support rollers is not needed. The result is smooth operation with improved lifetime for rolling components.

IMPROVES LIFETIME FOR ROLLING COMPONENTS

MINIMIZES THE RISK OF BREAKDOWNS

REDUCES MAINTENANCE COSTS

FUNCTIONAL AND PROVEN DESIGN

GRAPHITE TYPE KILN INLET SEAL

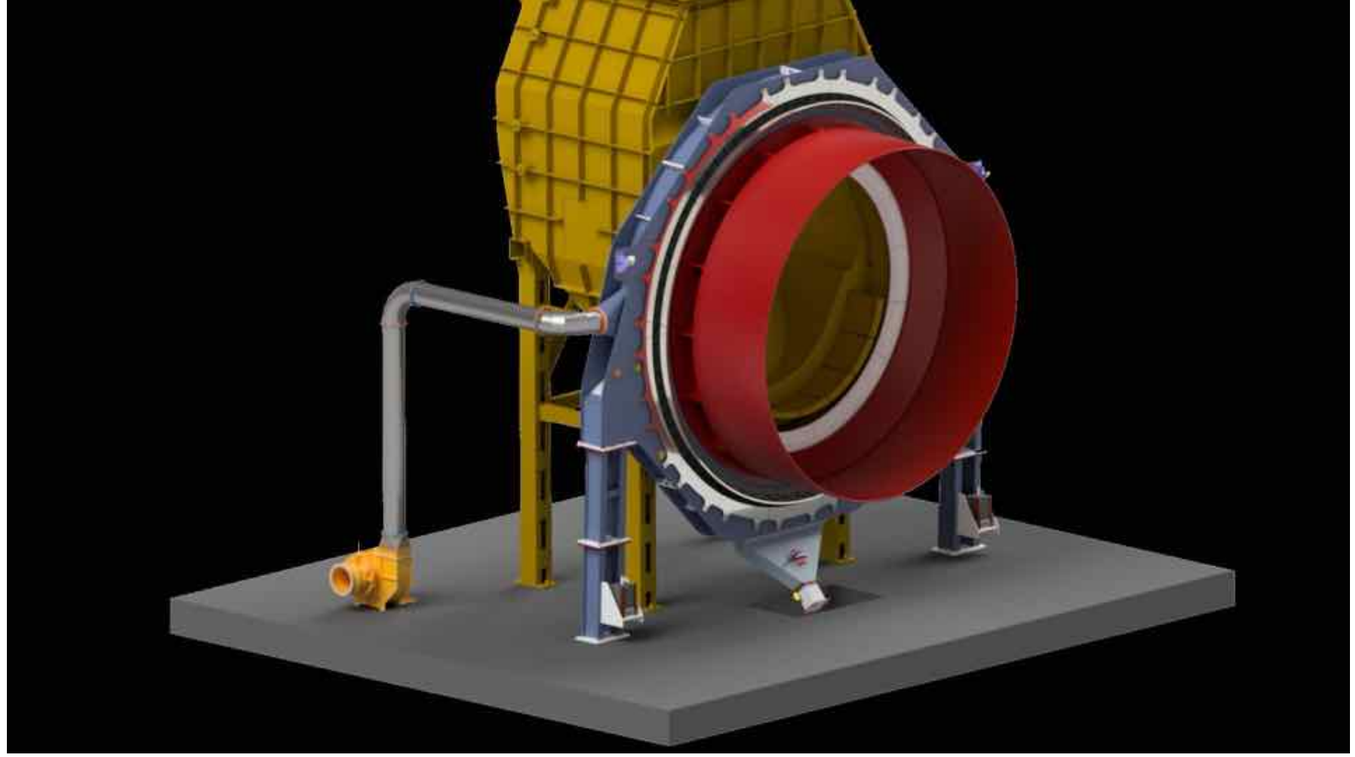

The inlet and outlet zones with seals are very critical parts of a kiln. If false air enters the kiln system, fuel consumption increases, production output decreases and operating expenses go up. Graphite seals require no greasing and are practically maintenance-free under normal operating conditions.

PROVIDE EFFECTIVE LEAK TIGHTNESS AROUND THE KILN DISCHARGE HOOD TO PREVENT COLD AIR INGRESS OR RELEASE OF HOT GASES AND PARTICLES

IMPROVE PRESSURE STABILITY IN THE KILN

ALLOW INSTALLATION ON EXISTING KILNS WITHOUT MODIFYING THE KILN SHELL OR KILN INLET

GRAPHITE TYPE KILN OUTLET SEAL

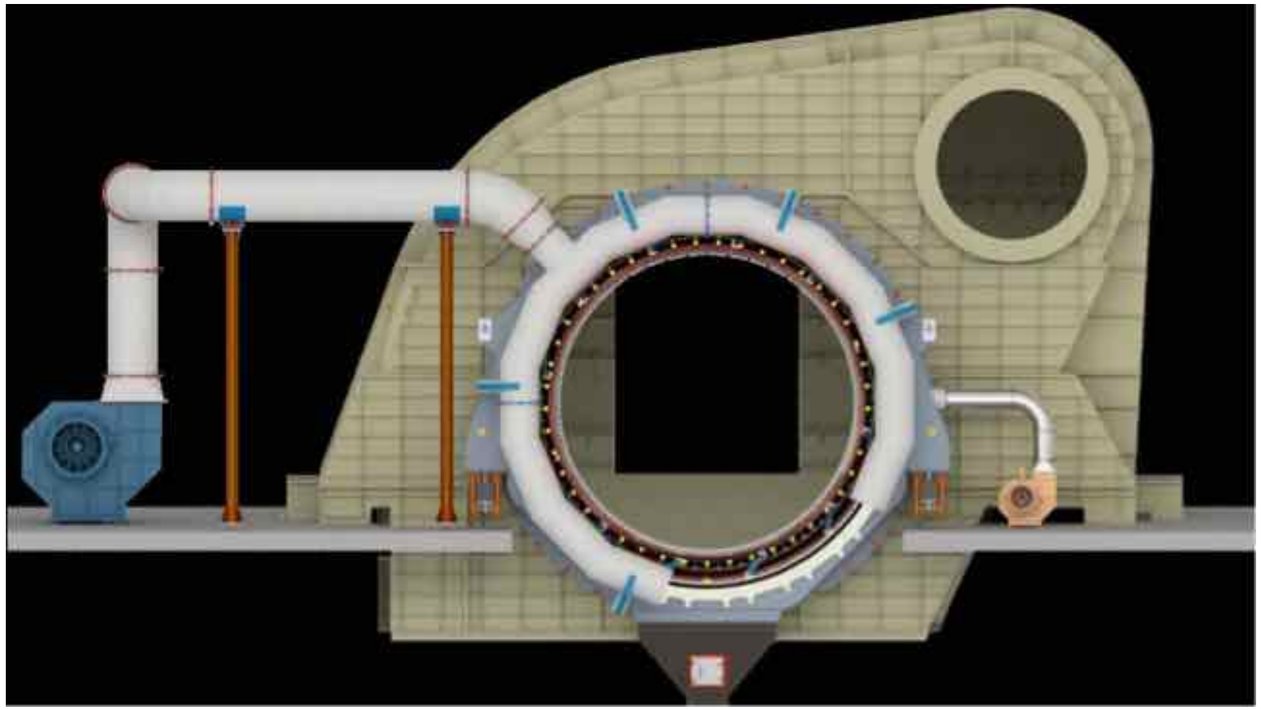

Our graphite seals reduce false air intake and allow enough flexibility to follow the kiln's movements.

Rows of graphite blocks are held in place by a wire rope system. This ensures an efficient seal against the outer air casing.

LEAK TIGHTNESS EFFICIENCY AND PREVENTION OF FALSE AIR LEAKAGE

ADAPTATION ON EXISTING KILNS AND EASY INSTALLATION

NO MAINTENANCE

CLINKER ROLLER CRUSHER



Our portfolio includes also clinker crusher. We offer our clients top-quality turnkey solutions for aggregate crushing systems.

We undertake custom-designing, engineering, installation, erection and commissioning of our range of aggregate crushing systems.

Our turnkey solutions are carried out by our experts who ensure minimum downtime and accuracy on the project.

TAILOR-MADE DESIGN AND MANUFACTURING

HIGH AVAILABILITY AND RELIABILITY OF MINIMIZING OPERATIONAL COSTS

LONG WEAR LIFE

EASY MAINTENANCE AND OPERATION

LOW POWER CONSUMPTION

IMPACT CRUSHER

DAL impact crushers are successfully used to crush non–abrasive materials with high crushing ratio.



HIGH AVAILABILITY AND RELIABILITY TO MINIMIZE OPERATIONAL COSTS

HYDRAULIC OPENING OF THE CRUSHER CASING FOR ADJUSTMENT AND EASY EXCHANGE OF CRUSHING ELEMENTS

FAST EXCHANGE OF BARS

HIGHLY WEAR RESISTANT MATERIALS OF MAIN CRUSHING COMPONENTS

EASY ADJUSTMENT OF THE CRUSHING GAP THROUGH HAND-OPERATED HYDRAULIC EQUIPMENT ADJUSTMENT OF THE CRUSHING GAP

DOUBLE ROTOR HAMMER CRUSHER



Largely dimensioned antifriction bearings.

One or two heavy flywheels to balance crusher peak loads.
Crushing hammers made of high-grade manganese steel.
Cheek plates made of high-strenght special steel.
Easy adjustment of the crushing gap through hand-operated hydraulic adjustment.

Automatic lubrication system can be applied upon request.

LONG WEAR LIFE TIME

WOBBLER APPLICATION TO INCREASE THE CRUSHER CAPACITY

LOW ENERGY CONSUMPTION

LOW MAINTENANCE COSTS

EASY MAINTENANCE WITH AUXILIARY ATTACHMENTS

SURFACE FEEDER

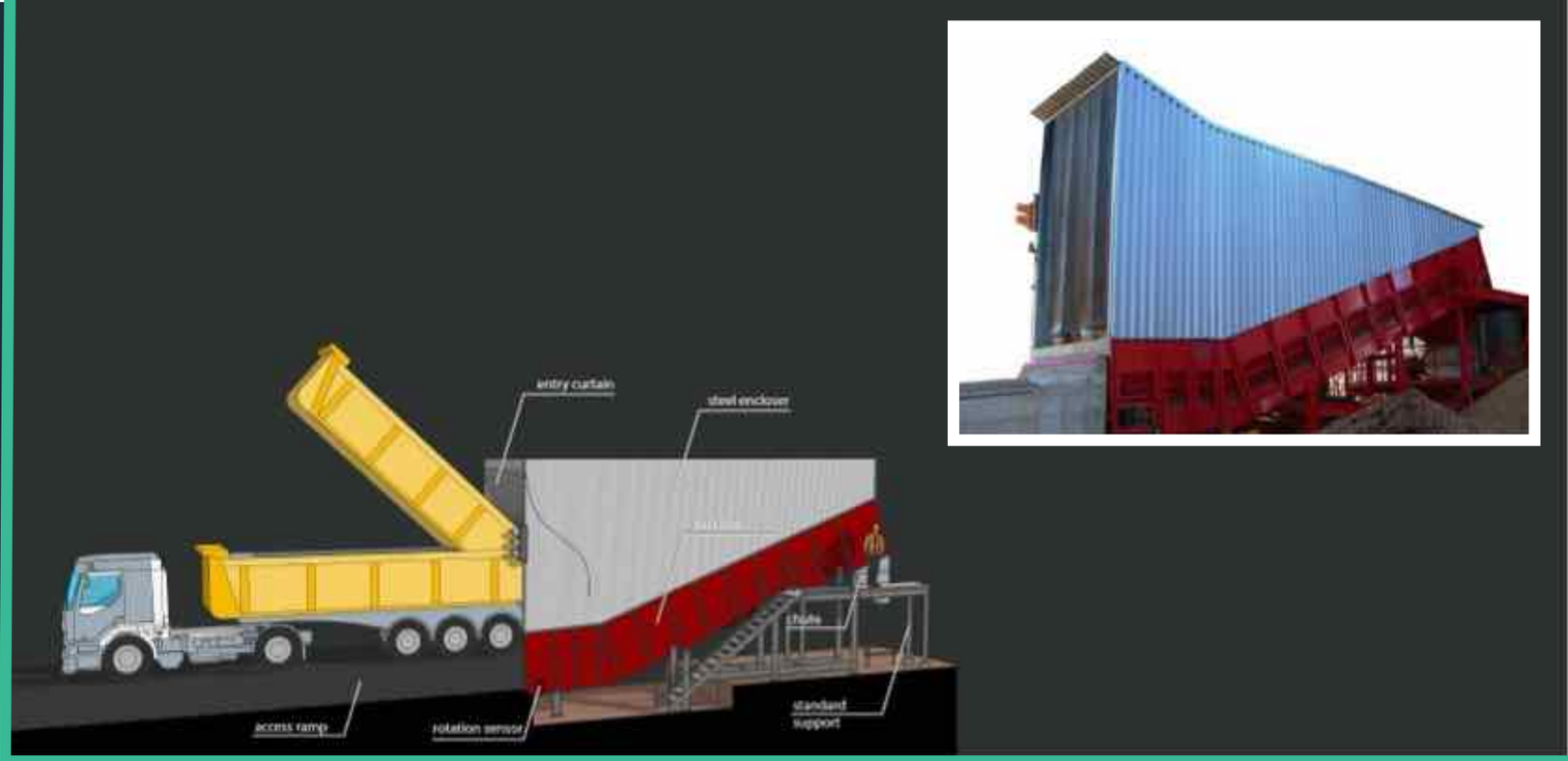

Dal Machinery & Design Surface feeder is firstly compound by a truck entry unit and dump station designed to receive material deposited by all type of trucks.

Our capabilities allow us to offer our clients turnkey and customized surface feeders at different capacities between 50 tph to 1000 tph with economical solutions ready to operate in harsh conditions such as high humidity.

EQUIPPED WITH BELT CLEANER (SCRAPER) IN THE DISCHARGE CHUTE

THE CHUTE ELIMINATES THE RISK OF BLOCKAGE WHEN HANDLING STICKY MATERIALS

LONG WEAR LIFE

FLEXIBILITY OF RELOCATION

OPTIMAL INSPECTION AND MAINTENANCE PLATFORM

FLEXIBLE CONSTRUCTION IN MODULES MINIMIZES THE TIME SPENT ON ERECTION AND ENGINEERING

APRON FEEDER





Apron feeders are used to extract or feed large, lumpy, abrasive and heavy ores under severe impact conditions including wet, sticky or frozen operations. A robust, heavy duty design provides minimal downtime and many years of service life.

THE MAINTENANCE FREE SLIDE RAIL IS MADE OF SPECIAL STEEL WHICH ALLOWS THE APRON FEEDER TO BE OPERATED WITHOUT AN ADDITIONAL LUBRICATION SYSTEM

ECO-FRIENDLY DESIGN AVOIDS GREASE OVERFLOW

HIGH OPERATIONAL SAFETY

STEEL SILOS





DAL steel bolted silos have customized sizes and layout for specific requirements, easy transportation and fast installation. Our system is the most effective solution for dry and granular bulk goods that are to be further processed into various types and grades.

MOST ECONOMICAL

VERY RELIABLE

EASY TO INSTALL

DELIVERY IN LESS THAN 3 MONTHS

SPARE PARTS













DAL is able to process each part of production, which has significant processing capacity independent of size and weight.

DAL can supply different kind of grey, ductile iron and cast iron, as well as all kinds of steel forging, aluminium and sheet parts.

FORGED, CASTED, WELDED AND MANUFACTURED FOR CAPABILITY OF DELIVERY PRODUCING PARTS FROM 1 KG UP TO 50 TONS

QUICK DELIVERY AND WORLDWIDE TRANSPORT

QUALITY ASSURANCE & QUALITY CONTROL ADVANCED MANUFACTURING AND ACQUISTION PLAN

SUPERVISION FOR ASSEMBLY AND COMMISIONING

DESIGN SOFTWARES



ANSYS

AUTODESK NASTRAN IN-CAD

[redacted]

SOLIDWORKS

HSC Chemistry 9

DAL 1
WORKSHOP

Indoor Area	6.000 m²
Crane Capacities	1 x 15 tons
Height Under the Crane	10 m
Management Building	400 m²





DAL 2
WORKSHOP

Indoor Area	**10.000 m²** (each building 5.000 m²)
Crane Capacities	**4 x 64 tons** **2 x 16 tons**
Height Under the Crane	**10,5 m**
Management Building	**3 stages** **500 m²**





DAL 2

CERTIFICATES









OUR CUSTOMERS



HEIDELBERGCEMENT

EURO CEMENT

Italcementi
Italcementi Group

LafargeHolcim

TITAN

CRH

CIMPOR

АГМК

ARGOS

SUMITOMO

TAIHEIYO CEMENT

MITSUBISHI

UNACEM

UltraTech CEMENT

Votorantim
Cimentos

ÇİMKO

INSEE CEMENT

KUHN

PIONEER CEMENT LTD.

NRC
NORTHERN REGION CEMENT CO.

OYAK ÇİMENTO

askale cımento

ADOÇİM

Valmet

LUCKY CEMENT

MARZINC

ÇİMENTO KONYA

ERDEMİR

çimentaş

YURT ÇİMENTO

ASAMER



HEADQUARTER
Şirinevler Mah. Adnan Kahveci Bulvarı No:206 Haydar Akın İş Mrk-1 34510
Bahçelievler, İstanbul - Turkey

DAL EUROPE
Hermannstal 5 30926
Seelze, Hannover - Germany

DAL 1
Yılmaz Alparslan Cad. No:31 Türkgücüköyü
Çorlu, Tekirdağ - Turkey

DAL 2
Karamehmet Mah. Avrupa Serbest Bölgesi Adnan Arısoy Bulvarı No:1/A
Ergene, Tekirdağ - Turkey

P: +90 (212) 639 85 00 **F:** +90 (212) 639 99 08 **E:** info@dalmachinery.com

www.dalmachinery.com